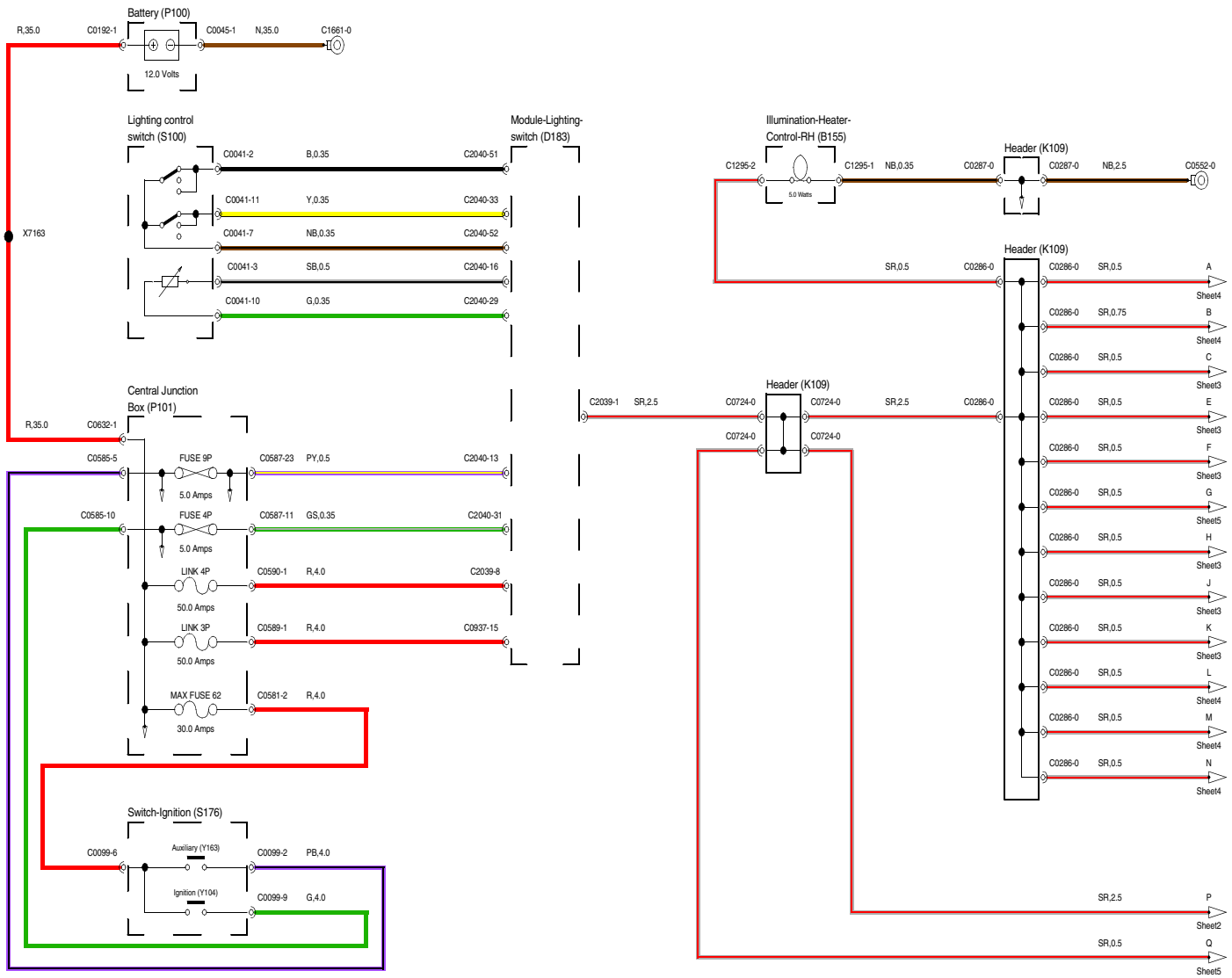
Battery (P100)
R,35.0
C0192-1
C0045-1
N,35.0
C1661-0
12.0 Volts
Lighting control switch (S100)
Module-Lighting-switch (D183)
C0041-2
B,0.35
C2040-51
C0041-11
Y,0.35
C2040-33
C0041-7
NB,0.35
C2040-52
C0041-3
SB,0.5
C2040-16
C0041-10
G,0.35
C2040-29
X7163
Illumination-Heater-Control-RH (B155)
C1295-2
C1295-1
NB,0.35
C0287-0
5.0 Watts
Header (K109)
C0287-0
NB,2.5
C0552-0
Header (K109)
SR,0.5
C0286-0
C0286-0
SR,0.5
A
Sheet4
C0286-0
SR,0.75
B
Sheet4
C0286-0
SR,0.5
C
Sheet3
C0286-0
SR,0.5
E
Sheet3
C0286-0
SR,0.5
F
Sheet3
C0286-0
SR,0.5
G
Sheet5
C0286-0
SR,0.5
H
Sheet3
C0286-0
SR,0.5
J
Sheet3
C0286-0
SR,0.5
K
Sheet3
C0286-0
SR,0.5
L
Sheet4
C0286-0
SR,0.5
M
Sheet4
C0286-0
SR,0.5
N
Sheet4
Central Junction Box (P101)
R,35.0
C0632-1
C0585-5
FUSE 9P
5.0 Amps
C0587-23
PY,0.5
C2040-13
C0585-10
FUSE 4P
5.0 Amps
C0587-11
GS,0.35
C2040-31
LINK 4P
50.0 Amps
C0590-1
R,4.0
C2039-8
LINK 3P
50.0 Amps
C0589-1
R,4.0
C0937-15
MAX FUSE 62
30.0 Amps
C0581-2
R,4.0
C2039-1
SR,2.5
C0724-0
Header (K109)
C0724-0
SR,2.5
C0286-0
C0724-0
C0724-0
Switch-Ignition (S176)
C0099-6
Auxiliary (Y163)
C0099-2
PB,4.0
Ignition (Y104)
C0099-9
G,4.0
SR,2.5
P
Sheet2
SR,0.5
Q
Sheet5

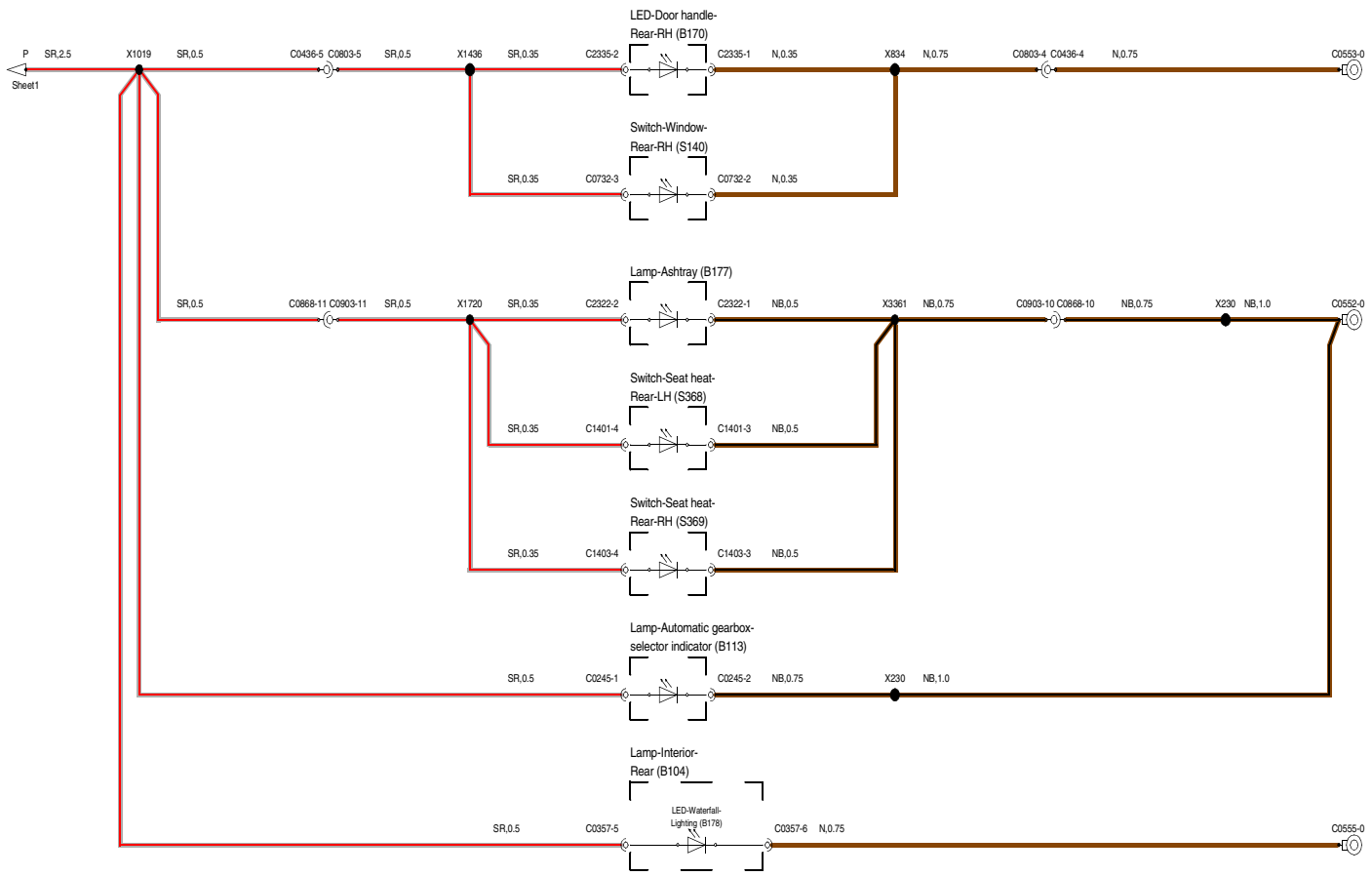
LED-Door handle-
Rear-RH (B170)
P
SR,2.5
X1019
SR,0.5
C0436-5
C0803-5
SR,0.5
X1436
SR,0.35
C2335-2
C2335-1
N,0.35
X834
N,0.75
C0803-4
C0436-4
N,0.75
C0553-0
Sheet1
Switch-Window-
Rear-RH (S140)
SR,0.35
C0732-3
C0732-2
N,0.35
Lamp-Ashtray (B177)
SR,0.5
C0868-11
C0903-11
SR,0.5
X1720
SR,0.35
C2322-2
C2322-1
NB,0.5
X3361
NB,0.75
C0903-10
C0868-10
NB,0.75
X230
NB,1.0
C0552-0
Switch-Seat heat-
Rear-LH (S368)
SR,0.35
C1401-4
C1401-3
NB,0.5
Switch-Seat heat-
Rear-RH (S369)
SR,0.35
C1403-4
C1403-3
NB,0.5
Lamp-Automatic gearbox-
selector indicator (B113)
SR,0.5
C0245-1
C0245-2
NB,0.75
X230
NB,1.0
Lamp-Interior-
Rear (B104)
LED-Waterfall-
Lighting (B178)
SR,0.5
C0357-5
C0357-6
N,0.75
C0555-0

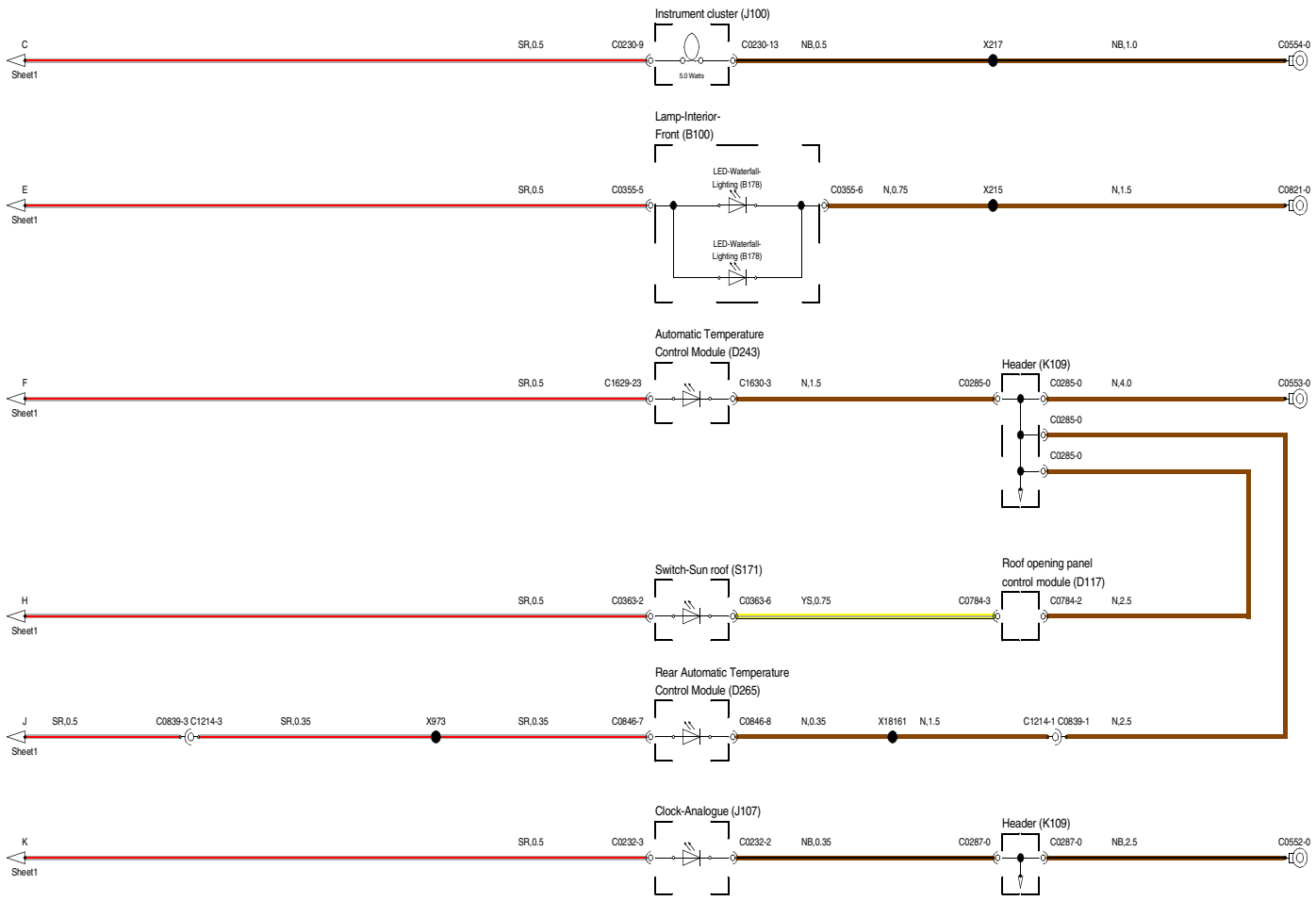
Instrument cluster (J100)
C
Sheet1
SR,0.5
C0230-9
5.0 Watts
C0230-13
NB,0.5
X217
NB,1.0
C0554-0
Lamp-Interior-
Front (B100)
E
Sheet1
SR,0.5
C0355-5
LED-Waterfall-
Lighting (B178)
LED-Waterfall-
Lighting (B178)
C0355-6
N,0.75
X215
N,1.5
C0821-0
Automatic Temperature
Control Module (D243)
F
Sheet1
SR,0.5
C1629-23
C1630-3
N,1.5
Header (K109)
C0285-0
C0285-0
N,4.0
C0553-0
C0285-0
C0285-0
Switch-Sun roof (S171)
H
Sheet1
SR,0.5
C0363-2
C0363-6
YS,0.75
Roof opening panel
control module (D117)
C0784-3
C0784-2
N,2.5
Rear Automatic Temperature
Control Module (D265)
J
Sheet1
SR,0.5
C0839-3 C1214-3
SR,0.35
X973
SR,0.35
C0846-7
C0846-8
N,0.35
X18161
N,1.5
C1214-1 C0839-1
N,2.5
Clock-Analogue (J107)
K
Sheet1
SR,0.5
C0232-3
C0232-2
NB,0.35
Header (K109)
C0287-0
C0287-0
NB,2.5
C0552-0

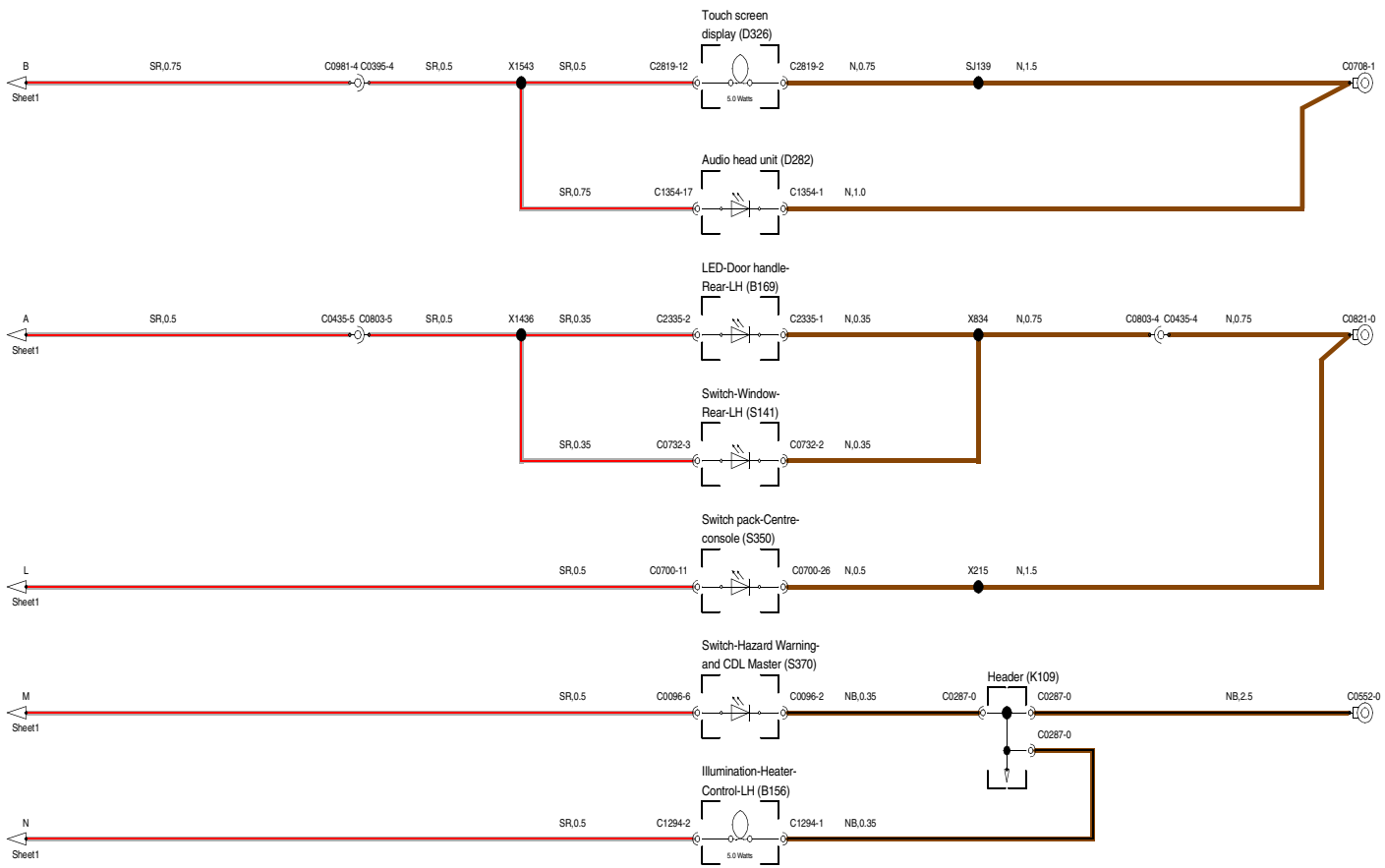
Touch screen display (D326)
B
Sheet1
SR,0.75
C0981-4 C0395-4
SR,0.5
X1543
SR,0.5
C2819-12
5.0 Watts
C2819-2
N,0.75
SJ139
N,1.5
C0708-1
Audio head unit (D282)
SR,0.75
C1354-17
C1354-1
N,1.0
LED-Door handle-Rear-LH (B169)
A
Sheet1
SR,0.5
C0435-5 C0803-5
SR,0.5
X1436
SR,0.35
C2335-2
C2335-1
N,0.35
X834
N,0.75
C0803-4 C0435-4
N,0.75
C0821-0
Switch-Window-Rear-LH (S141)
SR,0.35
C0732-3
C0732-2
N,0.35
Switch pack-Centre-console (S350)
L
Sheet1
SR,0.5
C0700-11
C0700-26
N,0.5
X215
N,1.5
Switch-Hazard Warning-and CDL Master (S370)
Header (K109)
M
Sheet1
SR,0.5
C0096-6
C0096-2
NB,0.35
C0287-0
C0287-0
NB,2.5
C0552-0
C0287-0
Illumination-Heater-Control-LH (B156)
N
Sheet1
SR,0.5
C1294-2
5.0 Watts
C1294-1
NB,0.35

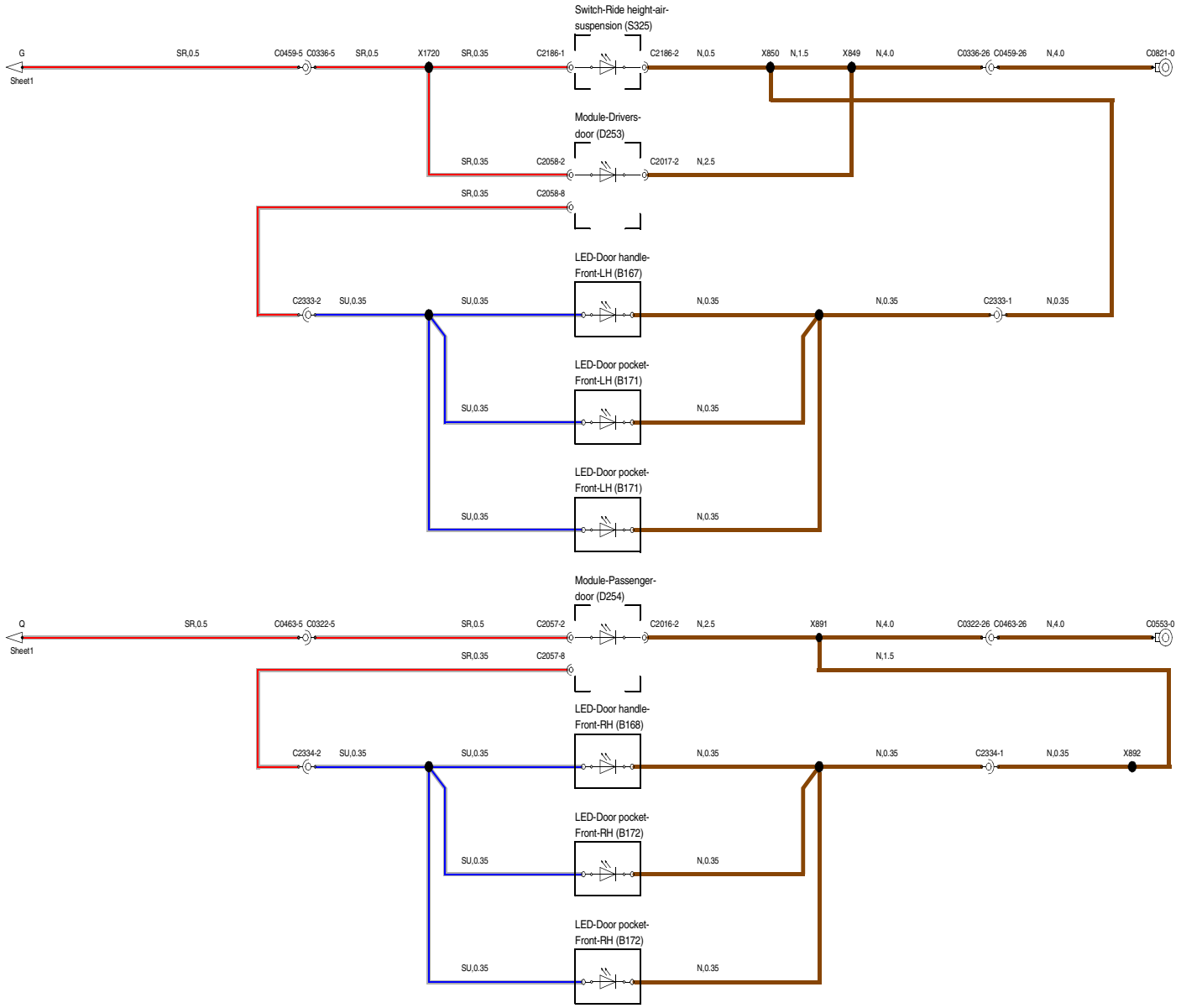
Switch-Ride height-air-suspension (S325)
G
Sheet1
SR,0.5
C0459-5
C0336-5
SR,0.5
X1720
SR,0.35
C2186-1
C2186-2
N,0.5
X850
N,1.5
X849
N,4.0
C0336-26
C0459-26
N,4.0
C0821-0
Module-Drivers-door (D253)
SR,0.35
C2058-2
C2017-2
N,2.5
SR,0.35
C2058-8
LED-Door handle-Front-LH (B167)
C2333-2
SU,0.35
SU,0.35
N,0.35
N,0.35
C2333-1
N,0.35
LED-Door pocket-Front-LH (B171)
SU,0.35
N,0.35
LED-Door pocket-Front-LH (B171)
SU,0.35
N,0.35
Module-Passenger-door (D254)
Q
Sheet1
SR,0.5
C0463-5
C0322-5
SR,0.5
C2057-2
C2016-2
N,2.5
X891
N,4.0
C0322-26
C0463-26
N,4.0
C0553-0
SR,0.35
C2057-8
N,1.5
LED-Door handle-Front-RH (B168)
C2334-2
SU,0.35
SU,0.35
N,0.35
N,0.35
C2334-1
N,0.35
X892
LED-Door pocket-Front-RH (B172)
SU,0.35
N,0.35
LED-Door pocket-Front-RH (B172)
SU,0.35
N,0.35